S300 PR

Heavy duty sensor for outdoor applications and harsh environments

- Industrial plastic housing with IP67 mechanical protection
- Defogging system function
- Double independent timing functions with double time scale from 0-2s or 0-10s, One-Delay, Off Delay, ONE SHOT

SENSORS

APPLICATIONS

-Packaging end of line, palletizers
-Outdoor or indoor gates control
-Automotive plants
-Automated warehousing

(*)DC models: ATEX II 3DG

S300 PA		
Through beam		0...60 m
Polarized retroreflective		0,1...22 m
Diffuse proximity		0,05...5 m
Background suppression		0,4...2,5 m
Power supply	Vdc	10...30 V
	Vac	
	Vac/dc	24...240 Vac/24...60 Vdc
Output	PNP	
	NPN	
	NPN/PNP	▪
	relay	▪
	other	
Connection	cable	
	connector	▪
	pig-tail	
Approximate dimensions (mm)		25x100x70
Housing material		PBT
Mechanical protection		IP67

Maxi Sensors - S300 PR

DATALOGIC

TECHNICAL DATA	
Power supply	10 ... 30 Vdc (mod. S300...2/5) 24...240 Vac/24...60 Vdc (mod. S300...1)
Ripple	10% max.
Consumption (output current excluded)	30 mA max. (mod. S300...2/5-B/C) 35 mA max. (mod. S300...2/5-M) 25 mA max. (mod. S300...2/5-F) 20 mA max. (mod. S300...2/5-G) 3 VA max. (mod. S300...1)
Light emission	red LED 660 nm (mod. S300...B) IR LED 880 nm (mod. S300...C/G/M)
Setting	sensitivity trimmer, DARK/LIGHT trimmer (mod. S300...F/C/B) 15 turns adjustment screw/DARK/LIGHT trimmer (mod. S300...M) emission power regulation trimmer (mod. S300...G) versions with timing functions: time base selection and one shot trimmer/ON DELAY trimmer/OFF DELAY trimmer (mod. S300...x06)
Indicators	yellow OUTPUT LED (excl. mod. S300...G) green STABILITY LED, POWER LED (mod. S300...G)
Output	PNP or NPN open collector (mod. S300...2/5); Electromechanical SPDT 250 Vac/30 Vdc (mod. S300...1)
Output current	100 mA (mod. S300...2/5) 3 A max. (mod. S300...1)
Saturation voltage	2,4 V max.
Response time	1 ms (mod. S300..2/5-B/C/F/G) 2 ms (mod. S300...2/5-M) 20 ms (mod. S300...1)
Switching frequency	500 Hz (mod. S300..2/5-/B/C/F/G) 250 Hz (mod. S300...2/5-M) 25 Hz (mod. S300...1)
Connection	terminal block, M12 4-pole connector (only DC mod.)
Dielectric strength	500 Vac, 1 min between electronics and housing
Insulating resistance	>20 MΩ, 500 Vdc between electronics and housing
Electrical protection	class 2 (mod. S300...2/5)
Mechanical protection	IP67 (IEC/EN60529)/cable gland EN50262
Ambient light rejection	according to EN 60947-5-2
Vibrations	0,5 mm amplitude, 10 ... 55 Hz frequency, for every axis (EN60068-2-6)
Shock resistance	11 ms (30 G) 6 shock for every axis (EN60068-2-27)
Housing material	PBT 30% glass fiber-reiforced
Lens material	frontal window and lens in PC
Operating temperature	-40 ... 55 °C
Storage temperature	-40 ... 70 °C
Weight	140 g (mod. S300...2/5), 150 g (mod. S300...1)

DIMENSIONS

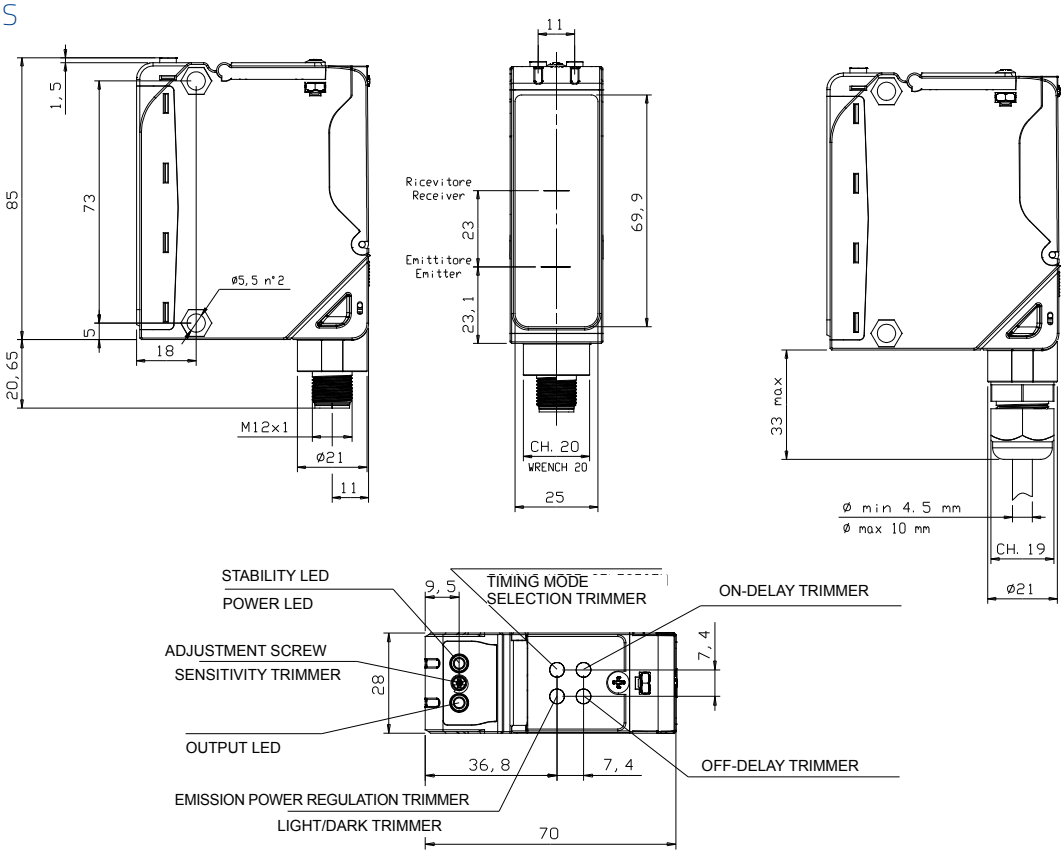

INDICATORS AND SETTINGS

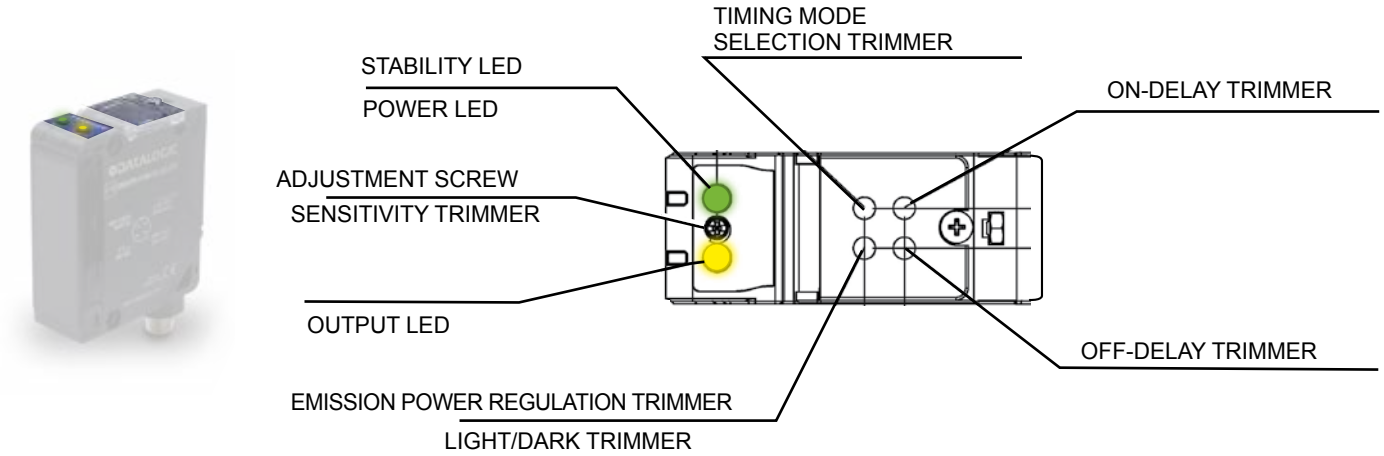

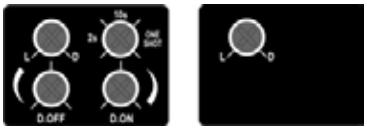

Vers. with timing functions

Vers. without timing functions

CONNECTIONS

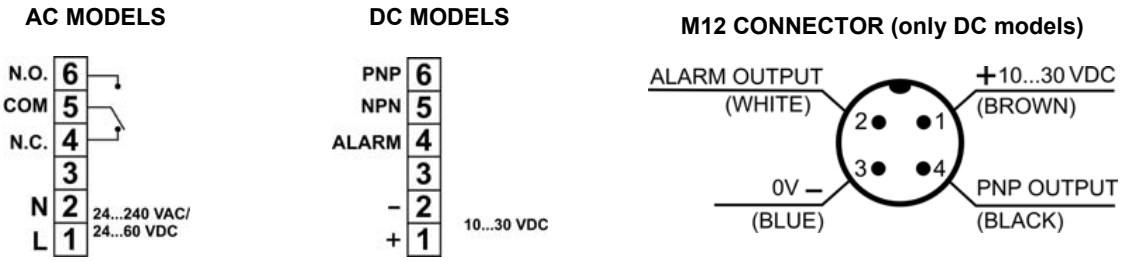

Through beam emitter

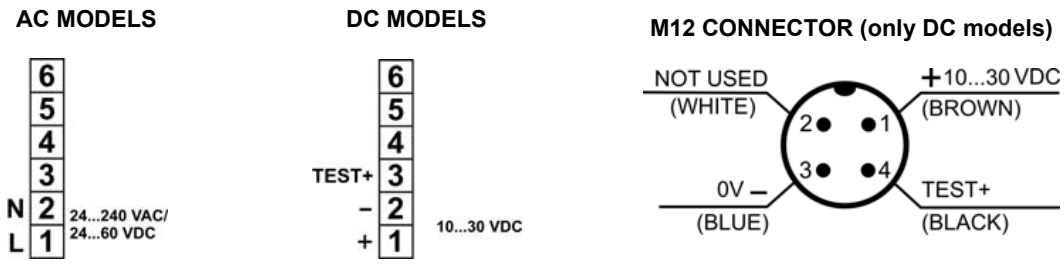

Maxi Sensors - S300 PR

DATALOGIC

DETECTION DIAGRAMS

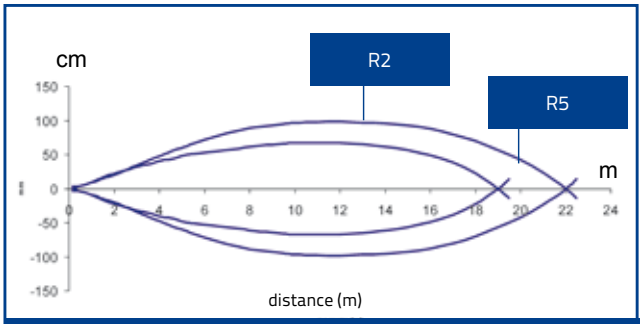

Polarized retroreflective on R2 reflector

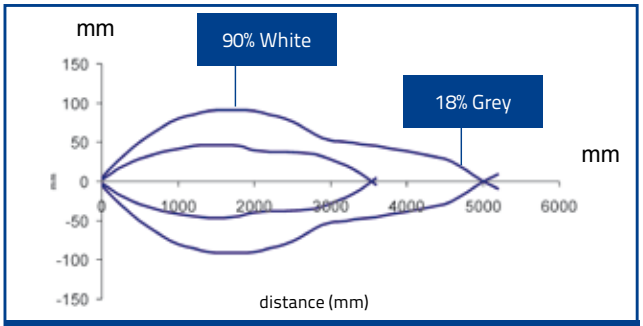

Diffuse proximity

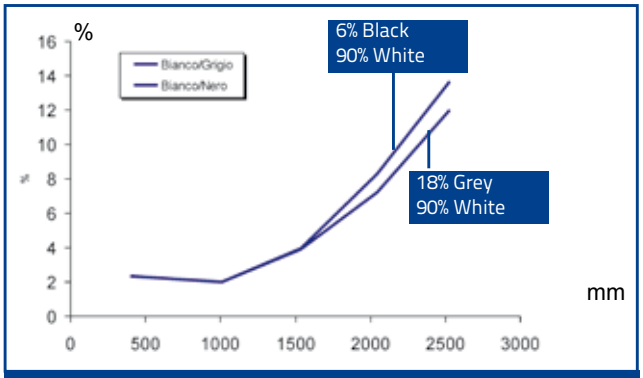

Background suppression

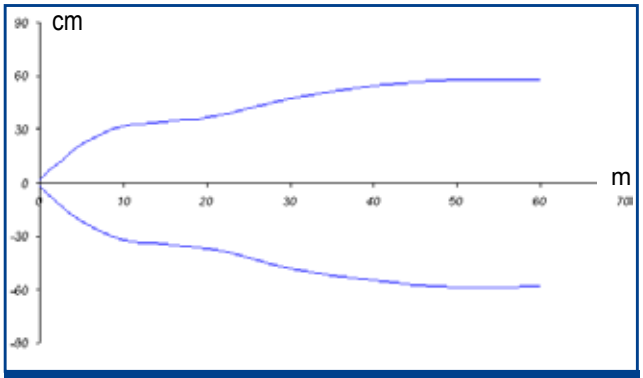

Through beam

MODEL SELECTION AND ORDER INFORMATION

OPTIC FUNCTION	OUTPUT	CONNECTION	SETTING	MODEL	ORDER No.
Polarized retroreflective	NPN/PNP	Vdc - Terminal block	Sensitivity and D/L trimmers	S300-PR-2-B01-OC	951451000
			Timing, sensitivity and D/L trimmers	S300-PR-2-B06-OC	951451010
		Vdc - M12 Connector	Sensitivity and D/L trimmers	S300-PR-5-B01-OC	951451020
			Timing, sensitivity and D/L trimmers	S300-PR-5-B06-OC	951451030
	Relay	Vac - Terminal block	Sensitivity and D/L trimmers	S300-PR-1-B01-RX	951451040
			Timing, sensitivity and D/L trimmers	S300-PR-1-B06-RX	951451050
			Timing, sensitivity and D/L trimmers; defogging function	S300-PR-1-B06-RX-M	951451060
Diffused proximity	NPN/PNP	Vdc - Terminal block	Sensitivity and D/L trimmers	S300-PR-2-C01-OC	951451070
			Timing, sensitivity and D/L trimmers	S300-PR-2-C06-OC	951451080
		Vdc - M12 Connector	Sensitivity and D/L trimmers	S300-PR-5-C01-OC	951451090
			Timing, sensitivity and D/L trimmers	S300-PR-5-C06-OC	951451100
	Relay	Vac - Terminal block	Sensitivity and D/L trimmers	S300-PR-1-C01-RX	951451110
			Timing, sensitivity and D/L trimmers	S300-PR-1-C06-RX	951451120
			Timing, sensitivity and D/L trimmers; defogging function	S300-PR-1-C06-RX-M	951451130
Through beam receiver	NPN/PNP	Vdc - Terminal block	Sensitivity and D/L trimmers	S300-PR-2-F01-OC	951451210
			Timing, sensitivity and D/L trimmers	S300-PR-2-F06-OC	951451220
		Vdc - M12 Connector	Sensitivity and D/L trimmers	S300-PR-5-F01-OC	951451230
			Timing, sensitivity and D/L trimmers	S300-PR-5-F06-OC	951451240
	Relay	Vac - Terminal block	Sensitivity and D/L trimmers	S300-PR-1-F01-RX	951451250
			Timing, sensitivity and D/L trimmers	S300-PR-1-F06-RX	951451260
			Timing, sensitivity and D/L trimmers; defogging function	S300-PR-1-F06-RX-M	951451270
Through beam emitter	-	Vdc - Terminal block	Emission power regulation trimmer	S300-PR-2-G00-EX	951451280
		Vdc - M12 Connector		S300-PR-5-G00-EX	951451290
		Vac - Terminal block		S300-PR-1-G00-EX	951451300
			Defogging function	S300-PR-1-G00-EX-M	951451310
Background suppression	NPN/PNP	Vdc - Terminal block	Sensitivity and D/L trimmers	S300-PR-2-M01-OC	951451140
			Timing, sensitivity and D/L trimmers	S300-PR-2-M06-OC	951451150
		Vdc - M12 Connector	Sensitivity and D/L trimmers	S300-PR-5-M01-OC	951451160
			Timing, sensitivity and D/L trimmers	S300-PR-5-M06-OC	951451170
	Relay	Vac - Terminal block	Sensitivity and D/L trimmers	S300-PR-1-M01-RX	951451180
			Timing, sensitivity and D/L trimmers	S300-PR-1-M06-RX	951451190
			Timing, sensitivity and D/L trimmers; defogging function	S300-PR-1-M06-RX-M	951451200

ACCESSORIES

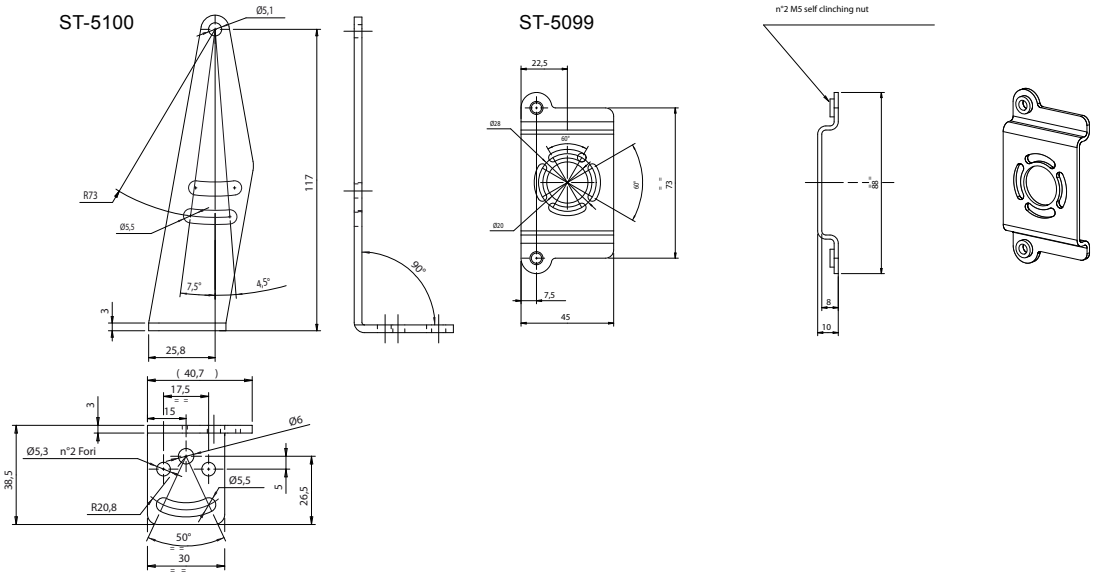

MODEL	DESCRIPTION	ORDER No.
ST-5099	mounting BRACKET	95ACC2830
ST-5100	mounting BRACKET	95ACC2840

CABLES

TYPE	DESCRIPTION	LENGTH	MODEL	ORDER No.
Axial M12 Connector	4-pole, grey, P.V.C.	3 m	CS-A1-02-G-03	95A251380
		5 m	CS-A1-02-G-05	95A251270
		7 m	CS-A1-02-G-07	95A251280
		10 m	CS-A1-02-G-10	95A251390
	4-pole, P.U.R.	2 m	CS-A1-02-R-02	95A251540
		5 m	CS-A1-02-R-05	95A251560
Radial M12 Connector	4-pole, grey, P.V.C.	3 m	CS-A2-02-G-03	95A251360
		5 m	CS-A2-02-G-05	95A251240
		7 m	CS-A2-02-G-07	95A251245
		10 m	CS-A2-02-G-10	95A251260
	4-pole, P.U.R.	2 m	CS-A2-02-R-02	95A251550
		5 m	CS-A2-02-R-05	95A251570
Axial M12 Connector	4-pole, shielded, black, P.V.C.	3 m	CV-A1-22-B-03	95ACC1480
		5 m	CV-A1-22-B-05	95ACC1490
		10 m	CV-A1-22-B-10	95ACC1500
		15 m	CV-A1-22-B-15	95ACC2070
		25 m	CV-A1-22-B-25	95ACC2090
Radial M12 Connector		3 m	CV-A2-22-B-03	95ACC1540
		5 m	CV-A2-22-B-05	95ACC1550
		10 m	CV-A2-22-B-10	95ACC1560
Axial M12 Connector	4-pole, U.L., black, P.V.C.	3 m	CS-A1-02-U-03	95ASE1120
		5 m	CS-A1-02-U-05	95ASE1130
		10 m	CS-A1-02-U-10	95ASE1140
		15 m	CS-A1-02-U-15	95ASE1150
		25 m	CS-A1-02-U-25	95ASE1160
	4-pole, black	Connector- not cabled	CS-A1-02-B-NC	G5085002
Radial M12 Connector		Connector- not cabled	CS-A2-02-B-NC	G5085003

Maxi Sensors - S300 PR

Rev. 01, 07/2016